FTB-B-12-XXX

MEDIUM PRESSURE FILTER

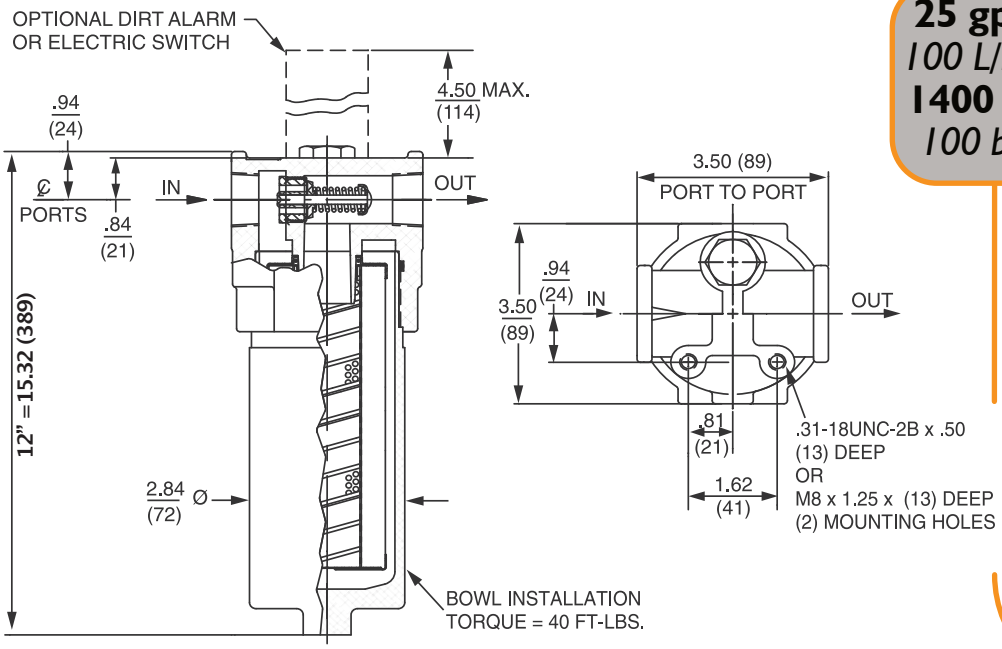

25 gpm
100 L/min
1400 psi
100 bar

Filter Housing Specifications	
Flow Rating	Up to 25 gpm (100 L/min) for 150 SUS (32 cSt) fluids
Max. Operating Pressure	1400 psi (100 bar)
Min. Yield Pressure	4000 psi (276 bar)
Rated Fatigue Pressure	750 psi (52 bar) per NFPA T2.6.1-R1-2005
Temp. Range	-20°F to 225°F (-29°C to 107°C)
Bypass Setting	Cracking: 40 psi (2.8 bar) Full Flow: 55 psi (3.8 bar)
Porting Head Element Case	Aluminium Aluminium
Weight of FTB-B-12	4.5 lbs. (2kg)
Element Change Clearance	2.75" (70mm)

Fluid Compatibility	
Type Fluid	**Appropriate Media**
Petroleum Based Fluids	All Paper (E) and Synthetic (Z)
High Water Content	All Z-Media® (synthetic)
Invert Emulsions	10 and 25 μ Z-Media® (synthetic)
Water Glycols	3, 5, 10 and 25 μ Z-Media® (synthetic)
Phosphate Esters	All Z-Media® (synthetic) with H (EPR) seal designation
Skydrol	Z3H.5, Z5H.5, Z10H.5 & Z25H.5

Element Performance Information

Element	Absolute Rating Per ISO 4572 / NFPA T3.10.8.8			Abs. Rating wrt ISO 16889		Dirt Holding
	Using automated particle counter (APC) calibrated per ISO 4402			Using APC calibrated per ISO 11171		
	$ß_x \geq 75$	$ß_x \geq 100$	$ß_x \geq 200$	$ß_x(c) \geq 200$	$ß_x$ (c) ≥ 1000	Capacity gm
FTB-12-01	<1.0	<1.0	<1.0	<4.0	4.2	30
FTB-12-03	<1.0	<1.0	<2.0	4.7	5.8	30
FTB-12-05	2.5	3.0	4.0	6.5	7.5	34
FTB-12-10	7.4	8.2	10.0	10.0	12.7	28
FTB-12-25	18.0	20.0	22.5	19.0	24.0	50

Element Collapse Rating: 150 psid (10 bar)
Flow Direction: Outside In
Element Nominal Dimensions: 2.0" O.D. X 6.0" (150mm) long

SAME DAY SHIPPING MODEL AVAILABLE!

Filtertechnik Ltd, 1 Central Park, Lenton Lane, Nottingham, NG7 2NR. United Kingdom.
t: +44 (0)115 9003 600 e:sales@filtertechnik.co.uk www.filtertechnik.co.uk

Features and Benefits

.

- Quick and easy cartridge change outs.
- Available in 6”
- Lightweight at 4.5lbs
- Various Dirt Alarm® options
- Same day shipment model available

Pressure Drop Information

Based on the Flow Rate and Viscosity

ΔP filter = ΔP housing + ΔP element	ΔP housing	ΔP element
Exercise: Determine **ΔP** at 15 gpm (57 L/min) for FTB-B-6-FTB-6-03-B12-D5 using 200 SUS (44 cSt) fluid. **Solution:** **ΔP** housing = 5 psi [.34 bar] **ΔP** element = 7 psi [.48 bar] V *f* = 100 SUS (21.3 cSt) / 150 SUS (32 cSt) =.67 **ΔP** filter = 5 psi + (7 psi * .67) = 9.7psi **OR** **ΔP** filter= .34 bar + (.48 bar * .67)= .66 bar	FTB-B-12 **ΔP** housing for fluids with specific gravity = 0.86: 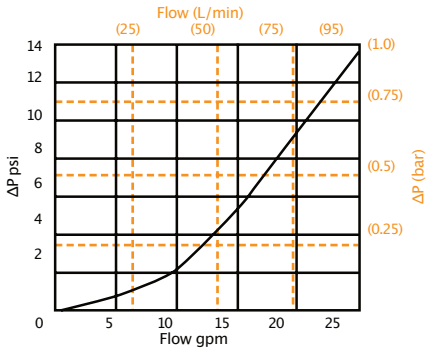 sp gr = specific gravity	**ΔP** element = flow x element **ΔP** factor x viscosity factor *El.* **ΔP** *factors @150 SUS (32 cSt):* **FTB-12-01** 1.11 **FTB-12-03** .55 **FTB-12-05** .50 **FTB-12-10** .46 **FTB-12-25** .25 If working in units of bars & L/min, divide above factor by 54.9. *Viscosity factor:* Divide viscosity by 150 SUS (32 cSt).

Order Guide

FTB-B-12- ☐☐ ☐ ☐☐☐ ☐☐

Media (μ)
01
03
05
10
25

Seal Material
- (OMIT) = Buna N
H = EPR
V = Viton®

Porting
B12 = ISO 228 G - ¾ (3/4 - 14 BSPP)

(B12 porting supplied with metric mounting holes)

Dirt Alarm
D5 - Cartridge

Options
Electrical Indicator (Available on request)